SIMTEK

Tools for
highest
expectations

Performance without compromise for **special applications.**

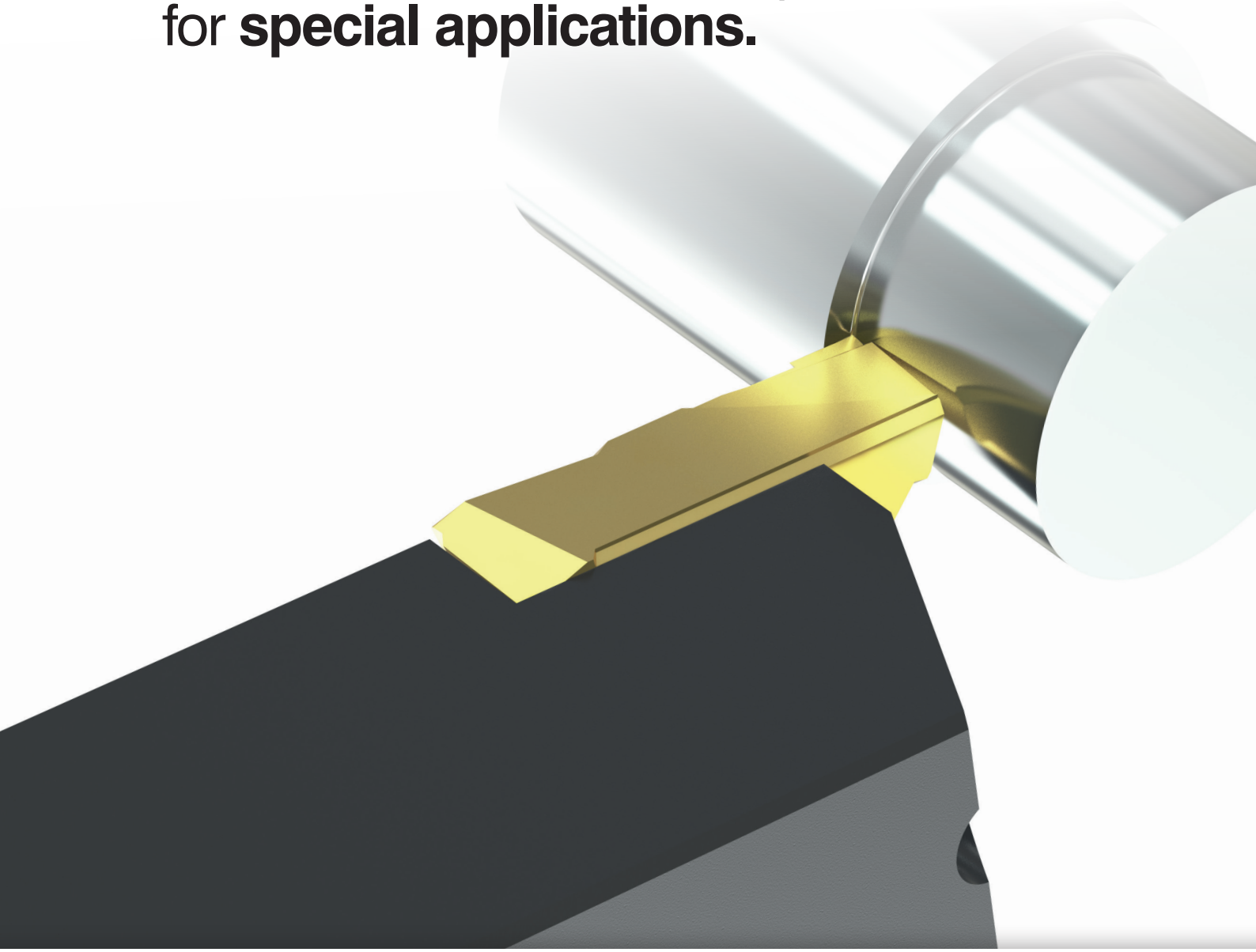

simturn FX

SIMTEK Turning Tools Type FX

Part Catalog

R20 US-Edition

Tools for
highest
expectations

Contact

SIMTEK USA Inc.
13 Fairfield Ave. Suite 104
US 07424-1257 Little Falls, NJ

fon +1 862 757 8130
fax +1 862 757 8134
mail usa@simtek.com
web www.simtek.com/usa

© 2020 SIMTEK Group. All rights reserved. Errors, omissions and changes excepted. Reprint of this catalog, complete or in extracts, only with our prior written permission. precium is a product of the SIMTEK Group and exclusively distributed through the global SIMTEK Distribution Network. SIMTEK, simturn, simmill, and simcut are registered trademarks in the US and several other countries. „QR Code“ is a registered trademark of DENSO WAVE INCORPORATED. This document has been prepared in English. In the event a translation exists and there is a discrepancy, this English original shall prevail.

The Tool System Overview

Please read the general instructions for use on page 33

Performance without compromise for special applications.

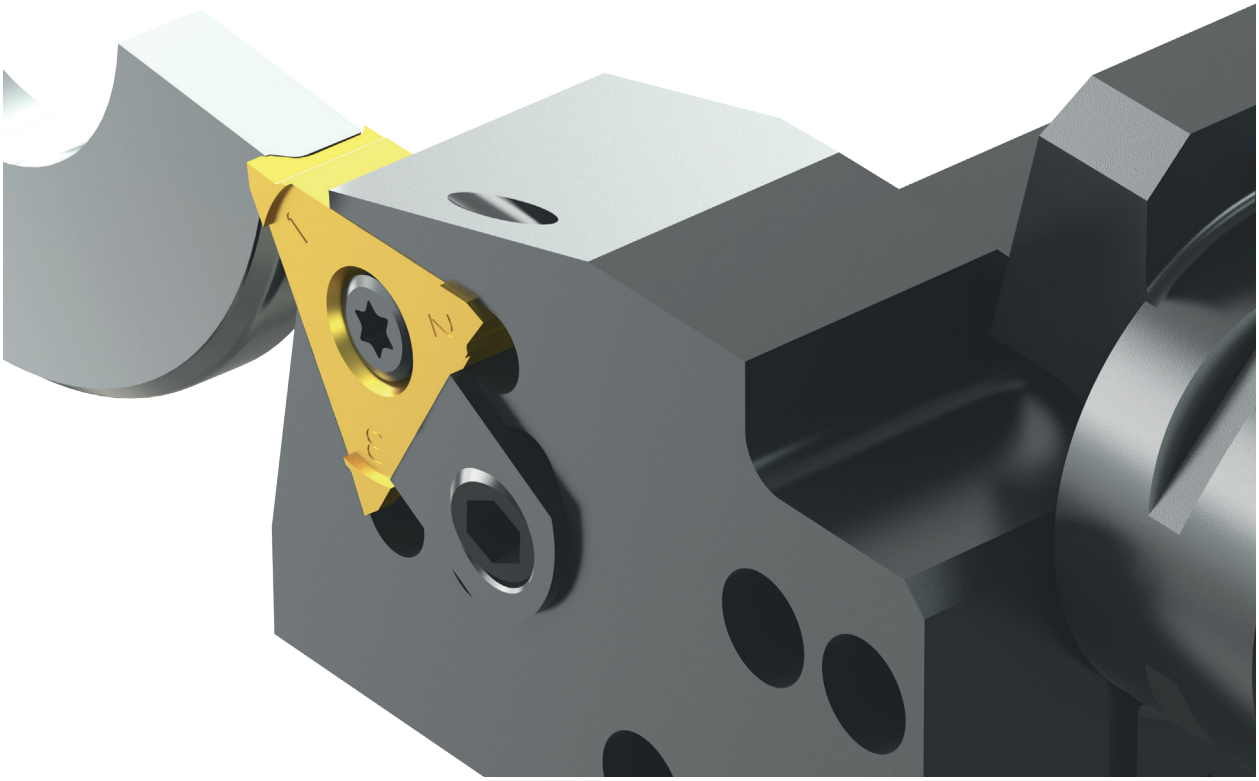

Standard cutting inserts as of page 4

These systems are the first choice for individual needs towards highest precision, repeatability, performance and stability without compromise.

Triple-edged, fully ground and indexable carbide cutting insert for standard- and special applications. Wide range of standard toolholders and a matching special solution in case there is no standard given.

Standard Applications

As of Page 16

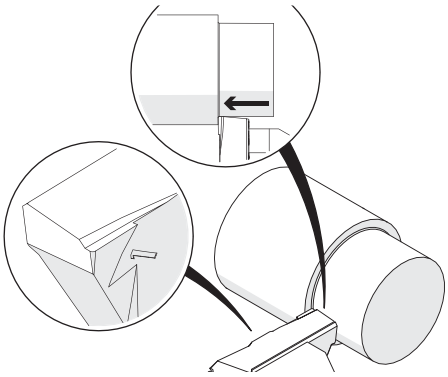

Turning

Page 18

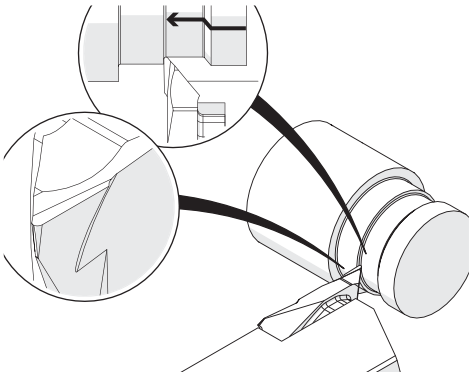

Turning and Profiling

Page 19

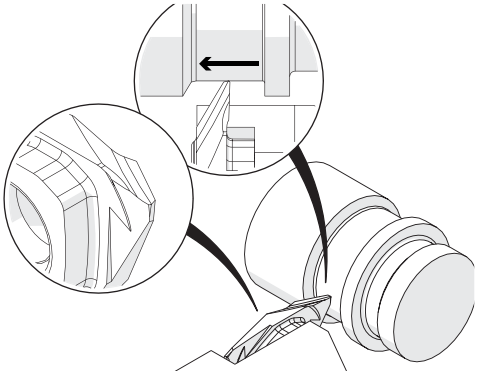

Back Turning

As of Page 21

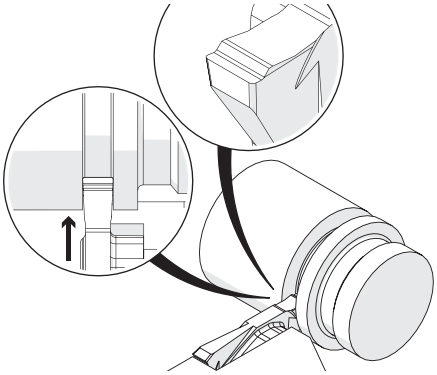

Grooving and Profiling

Page 25

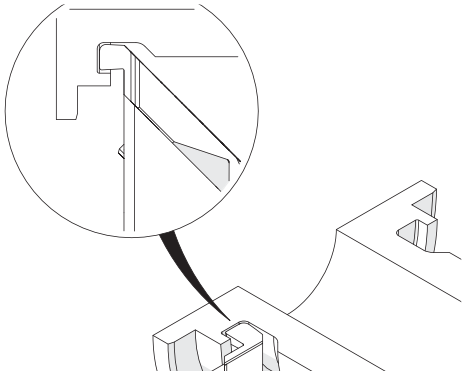

Face Thread Reliefs

Toolholder, External Applications, Type A

Toolholder for external applications and form widths up to 6,0 mm (0.236“).

Tightening torque (screw)

“F M5x11,5 T20R”: 6,0 Nm
“F M5x12 T20R”: 6,0 Nm
“F M5x13 T20R”: 6,0 Nm

TW ST R Legend 27

Scan QR-Code Or Visit **www.simtek.info/cp/619**

This page contains inch tools! These tools are indicated by inch on the right hand side.

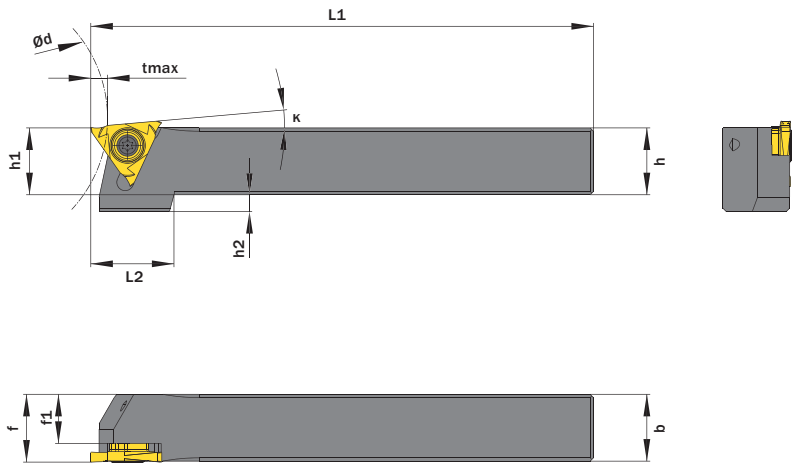

Drawing shows: TF3.50.2020.A.12.00 R

tmax depends on workpiece diameter (Ød)	tmax
Bis Ø63,0 mm / up to Ø2.480”	5,5 mm / 0.217”
Bis Ø80,0 mm / up to Ø3.150”	5,0 mm / 0.197”
Bis Ø100,0 mm / up to Ø3.937”	5,0 mm / 0.197”
Bis Ø160,0 mm / up to Ø6.299”	4,5 mm / 0.177”
Bis Ø200,0 mm / up to Ø7.874”	4,0 mm / 0.158”

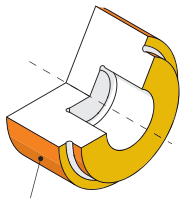

Mainly designed for these surfaces

Also possible depending on insert/fixation type

κ	h mm/inch	b mm/inch	L1 mm/inch	Partnumber	Webcode www.simtek.com/webcode	f mm/inch	f1 mm/inch	h1 js14 mm/inch	h2 mm/inch	L2 mm/inch	Screw	Screw driver	Connectcode www.simtek.com/ccode
▼ h = 12,0 mm													
0°	12,0	12,0	100,0	**TF3.01.1212.A.10.00 R/L**	R AXU9 L AXU8	12,4	6,9	12,0	9,0	24,0	F M5x11,5 T20R	T20R	R TF3.R.01.00 L TF3.L.01.00
▼ h = 0.625“													
0°	0.625“	0.625“	4.921“	**TF3.01.0.625.A.12.00 R**	A33K	0.641“	0.424“	0.625“	0.359“	0.945“	F M5x12 T20R	T20R	TF3.R.01.00 inch
▼ h = 16,0 mm													
0°	16,0	16,0	125,0	**TF3.01.1616.A.12.00 R/L**	R AWC5 L AWC4	16,4	10,9	16,0	9,0	24,0	F M5x13 T20R	T20R	R TF3.R.01.00 L TF3.L.01.00
0°	16,0	16,0	125,0	**TF3.01.1616.A.12.08 R/L**	R AZF5 L AZF4	16,4	8,55	16,0	9,0	24,0	F M5x13 T20R	T20R	R TF3.R.01.08 L TF3.L.01.08
5°	16,0	16,0	125,0	**TF3.51.1616.A.12.00 R/L**	R ASBB L ASBA	16,4	10,9	16,0	9,0	24,0	F M5x13 T20R	T20R	R TF3.R.51.00 L TF3.L.51.00
▼ h = 20,0 mm													
0°	20,0	20,0	125,0	**TF3.01.2020.A.12.00 R/L**	R AWC7 L AWC6	20,4	14,9	20,0	5,0	24,0	F M5x13 T20R	T20R	R TF3.R.01.00 L TF3.L.01.00
0°	20,0	20,0	125,0	**TF3.01.2020.A.12.08 R/L**	R AWNU L AWNV	20,4	12,55	20,0	5,0	24,0	F M5x13 T20R	T20R	R TF3.R.01.08 L TF3.L.01.08
0°	20,0	20,0	125,0	**TF3.01.2020.A.12.10 R/L**	R AWNX L AWNW	20,4	9,6	20,0	5,0	24,0	F M5x13 T20R	T20R	R TF3.R.01.10 L TF3.L.01.10
5°	20,0	20,0	125,0	**TF3.50.2020.A.12.00 R/L**	R AS58 L ATXZ	20,4	14,9	20,0	5,0	26,5	F M5x13 T20R	T20R	R TF3.R.50.00 L TF3.L.50.00
5°	20,0	20,0	125,0	**TF3.51.2020.A.12.00 R/L**	R ASBD L ASBC	20,4	14,9	20,0	5,0	24,0	F M5x13 T20R	T20R	R TF3.R.51.00 L TF3.L.51.00
▼ h = 25,0 mm													
0°	25,0	25,0	150,0	**TF3.01.2525.A.15.00 R/L**	R AWC9 L AWC8	25,4	19,9	25,0	-	-	F M5x13 T20R	T20R	R TF3.R.01.00 L TF3.L.01.00
0°	25,0	25,0	150,0	**TF3.01.2525.A.15.08 R/L**	R AZ5C L AZ5D	25,4	17,55	25,0	-	-	F M5x13 T20R	T20R	R TF3.R.01.08 L TF3.L.01.08
5°	25,0	25,0	150,0	**TF3.50.2525.A.15.00 R/L**	R AS57 L ATX0	25,4	19,9	25,0	-	-	F M5x13 T20R	T20R	R TF3.R.50.00 L TF3.L.50.00
5°	25,0	25,0	150,0	**TF3.51.2525.A.15.00 R/L**	R ASBF L ASBE	25,4	19,9	25,0	-	-	F M5x13 T20R	T20R	R TF3.R.51.00 L TF3.L.51.00
▼ h = 1.000“													
0°	1.000“	1.000“	5.906“	**TF3.01.1.000.A.15.00 R**	A3X7	1.016“	0.799“	1.000“	-	-	F M5x13 T20R	T20R	TF3.R.01.00 inch
▼ h = 32,0 mm													
5°	32,0	25,0	150,0	**TF3.50.3225.A.15.00 R/L**	R AS8G L AS8H	25,4	19,9	32,0	-	-	F M5x13 T20R	T20R	R TF3.R.50.00 L TF3.L.50.00

Order example: **TF3.01.2020.A.12.00 R** (R = Right hand version)

Toolholder, For External Application, Cranked, Type D

Toolholder for external applications. 45° and 90° cranked style.

Tightening torque (screw)

"F M5x13 T20R": 6,0 Nm
"M M5x0,5x7,5 T20R": 6,0 Nm

TW ST R Legend 27

Scan QR-Code Or Visit **www.simtek.info/cp/940**

This page contains inch tools! These tools are indicated by **inch** on the right hand side.

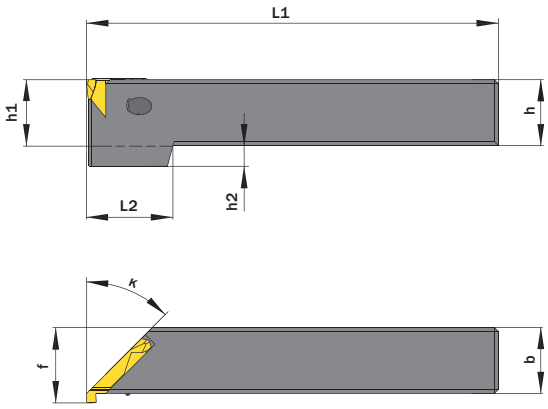

Drawing shows: TF3.00.1616.D.45.10.00 R

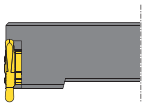

TF3.51.2020.D.90.12.00 R

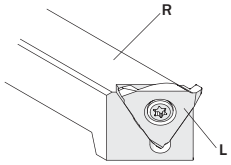

Please use right hand toolholder with left hand insert and vice versa.

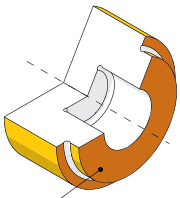

Mainly designed for these surfaces

Also possible depending on fixation type

h mm/inch	b mm/inch	κ	L1 mm/inch	Part number	Webcode www.simtek.com/webcode	f mm/inch	h1 js14 mm/inch	h2 mm/inch	L2 mm/inch	Screw	Screw driver	Connectcode www.simtek.com/ccode	
▼ κ = 45°													
0.625"	0.625"	45°	3.937"	**TF3.00.062S.D.45.10.00 R**	A4XF	0.716"	0.625"	0.202"	0.827"	M M5x0,5x7,5 T20R	T20R	TF3.R.45.00.03	inch
0.750"	0.750"	45°	4.921"	**TF3.00.075S.D.45.12.00 R**	A4P9	0.841"	0.750"	0.234"	0.827"	M M5x0,5x7,5 T20R	T20R	TF3.R.45.00.03	inch
1.000"	1.000"	45°	5.906"	**TF3.00.100S.D.45.15.00 R**	A4QB	1.091"	1.000"	-	-	M M5x0,5x7,5 T20R	T20R	TF3.R.45.00.03	inch
16,0	16,0	45°	100,0	**TF3.00.1616.D.45.10.00 R/L**	R AYJZ L A4PN	18,3	16,0	5,0	21,0	M M5x0,5x7,5 T20R	T20R	R TF3.R.45.00.03 L TF3.L.45.00.03	
20,0	20,0	45°	125,0	**TF3.00.2020.D.45.12.00 R/L**	R AYJØ L A4PQ	22,3	20,0	5,0	21,0	M M5x0,5x7,5 T20R	T20R	R TF3.R.45.00.03 L TF3.L.45.00.03	
25,0	25,0	45°	150,0	**TF3.00.2525.D.45.15.00 R/L**	R AYJY L A4PT	27,3	25,0	-	-	M M5x0,5x7,5 T20R	T20R	R TF3.R.45.00.03 L TF3.L.45.00.03	
▼ κ = 90°													
25,4	25,4	90°	150,0	**TF3.51.100S.D.90.15.00 R/L**	R A4TB L A4TD	32,4	25,4	-	-	F M5x13 T20R	T20R	R TF3.L.51.00 L TF3.R.51.00	
20,0	20,0	90°	125,0	**TF3.51.2020.D.90.12.00 R/L**	R AUDW L AU6Q	27,0	20,0	-	-	F M5x13 T20R	T20R	R TF3.L.51.00 L TF3.R.51.00	
25,0	25,0	90°	150,0	**TF3.51.2525.D.90.15.00 R/L**	R AT76 L AT77	32,0	25,0	-	-	F M5x13 T20R	T20R	R TF3.L.51.00 L TF3.R.51.00	

Order example: **TF3.00.2020.D.45.12.00 R** (R = Right hand version)

Toolholder, External Applications, Type A, with Adjustable Coolant Nozzle

Toolholder for external applications. With adjustable coolant nozzle for an optimized cooling according to the application and three usable connection threads for the coolant supply.

Tightening torque (screw)

"F M5x11,5 T20R": 6,0 Nm
"F M5x13 T20R": 6,0 Nm

TW ST R Legend 27

Scan QR-Code Or Visit **www.simtek.info/cp/1192**

This page contains inch tools! These tools are indicated by inch on the right hand side.

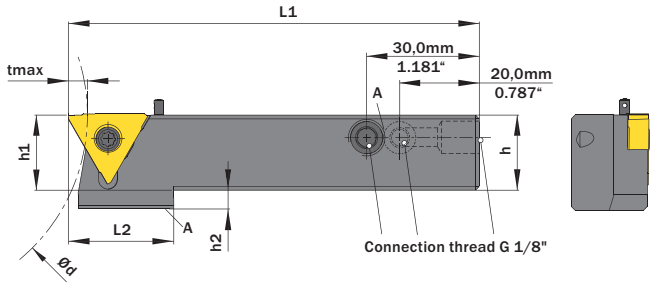

tmax depends on Workpiece diameter (Ød)	tmax
up to Ø63,0 mm / up to Ø2.480"	5,5 mm / 0.217"
up to Ø80,0 mm / up to Ø3.150"	5,0 mm / 0.197"
up to Ø100,0 mm / up to Ø3.937"	5,0 mm / 0.197"
up to Ø125,0 mm / up to Ø4.921"	4,5 mm / 0.177"
up to Ø160,0 mm / up to Ø6.299"	4,5 mm / 0.177"
up to Ø200,0 mm / up to Ø7.874"	4,0 mm / 0.158"

Coolant nozzle
TOC.A.5X13.PIN IC

Detail A

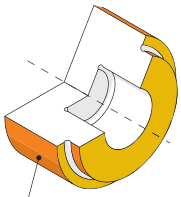

Mainly designed for these surfaces

Also possible depending on insert/fixation type

Drawing shows: TF3.01.2020.A.10.00 CG R

K	h mm/inch	b mm/inch	L1 mm/inch	Partnumber	Webcode www.simtek.com/webcode	f mm/inch	f1 mm/inch	h1 js14 mm/inch	h2 mm/inch	L2 mm/inch	Screw	Screw driver	Connectcode www.simtek.com/ccode	
▼ h = 12,0 mm														
0°	12,0	12,0	100,0	**TF3.01.1212.A.10.00 CG R/L**	R AZGB L AZGA	12,4	6,9	12,0	9,0	28,0	FM5x11,5T20R	T20R	R TF3.R.01.00 L TF3.L.01.00	
▼ h = 16,0 mm														
0°	16,0	16,0	100,0	**TF3.01.1616.A.10.00 CG R/L**	R AZGD L AZGC	16,4	10,9	16,0	9,0	28,0	FM5x13T20R	T20R	R TF3.R.01.00 L TF3.L.01.00	
▼ h = 0.750"														
0°	0.750"	0.750"	3.937"	**TF3.01.075S.A.10.08 CG R**	A4YN	0.766"	0.494"	0.750"	0.234"	1.102"	FM5x13T20R	T20R	TF3.R.01.08	inch
▼ h = 20,0 mm														
0°	20,0	20,0	100,0	**TF3.01.2020.A.10.00 CG R/L**	R AZGF L AZGE	20,4	14,9	20,0	5,0	28,0	FM5x13T20R	T20R	R TF3.R.01.00 L TF3.L.01.00	
0°	20,0	20,0	100,0	**TF3.01.2020.A.10.08 CG R/L**	R AZGH L AZGG	20,4	12,55	20,0	5,0	28,0	FM5x13T20R	T20R	R TF3.R.01.08 L TF3.L.01.08	
0°	20,0	20,0	100,0	**TF3.01.2020.A.10.10 CG R/L**	R AZGK L AZGJ	20,4	9,6	20,0	5,0	28,0	FM5x13T20R	T20R	R TF3.R.01.10 L TF3.L.01.10	
▼ h = 25,0 mm														
0°	25,0	25,0	100,0	**TF3.01.2525.A.10.00 CG R/L**	R AZGN L AZGM	25,4	19,9	25,0	-	-	FM5x13T20R	T20R	R TF3.R.01.00 L TF3.L.01.00	
0°	25,0	25,0	100,0	**TF3.01.2525.A.10.08 CG R/L**	R A1QK L A1S9	25,4	17,55	25,0	-	-	FM5x13T20R	T20R	R TF3.R.01.08 L TF3.L.01.08	
▼ h = 1.000"														
0°	1.000"	1.000"	3.937"	**TF3.01.100S.A.10.08 CG R**	A4YK	1.016"	0.707"	1.000"	-	-	FM5x13T20R	T20R	TF3.R.01.08	inch
0°	1.000"	1.000"	3.937"	**TF3.01.100S.A.10.10 CG R**	A42K	1.016"	0.591"	1.000"	-	-	FM5x13T20R	T20R	TF3.R.01.10	inch

Order example: **TF3.01.2020.A.10.00 CG R** (R = Right hand version)

Toolholder, External Applications, Type C

Toolholder for external applications and small widths with high cutting depths on large work piece diameters.

Tightening torque (screw)
6,0 Nm

TW ST R Legend 27

Scan QR-Code Or Visit **www.simtek.info/cp/622**

This page contains inch tools! These tools are indicated by **inch** on the right hand side.

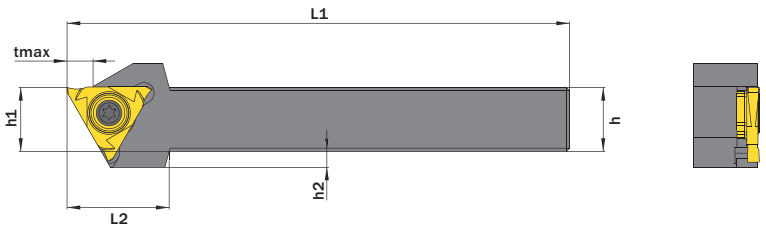

Measure f depends on cutting insert

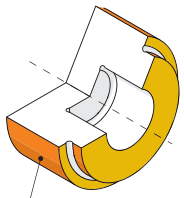

Mainly designed for these Surfaces

Also possible depending on insert/fixation type

Drawing shows: TF3.00.1616.C.12.00 R

h mm/inch	b mm/inch	L1 mm/inch	Part number	Webcode www.simtek.com/webcode	f1 mm/inch	h1 js14 mm/inch	h2 mm/inch	L2 mm/inch	tmax mm/inch	Screw	Screw driver	Connectcode www.simtek.com/ccode	
▼ h = 16,0 mm													
16,0	16,0	125,0	**TF3.00.1616.C.12.00 R/L**	R ASZX L ADAJ	10,9	16,0	5,0	25,0	5,0	F M5x13 T20R	T20R	R TF3.R.00.00 L TF3.L.00.00	
16,0	16,0	125,0	**TF3.50.1616.C.12.00 R/L**	R AG5J L ASZY	10,9	16,0	5,0	25,0	5,0	F M5x13 T20R	T20R	R TF3.R.50.00 L TF3.L.50.00	
16,0	16,0	125,0	**TF3.51.1616.C.12.00 R/L**	R AZ35 L AZ36	10,9	16,0	5,0	25,0	5,0	F M5x13 T20R	T20R	R TF3.R.51.00 L TF3.L.51.00	
▼ h = 0.750“													
0.750“	0.750“	4.921“	**TF3.51.0.750.C.12.00 R**	A3SX	0.549“	0.750“	0.234“	0.945“	0.197“	F M5x13 T20R	T20R	TF3.R.51.00	inch
▼ h = 20,0 mm													
20,0	20,0	125,0	**TF3.00.2020.C.12.00 R/L**	R AJFQ L ASZZ	14,9	20,0	-	-	5,0	F M5x13 T20R	T20R	R TF3.R.00.00 L TF3.L.00.00	
20,0	20,0	125,0	**TF3.50.2020.C.12.00 R/L**	R ABQ8 L ASZ0	14,9	20,0	-	-	5,0	F M5x13 T20R	T20R	R TF3.R.50.00 L TF3.L.50.00	
20,0	20,0	125,0	**TF3.51.2020.C.12.00 R/L**	R AA69 L ASZ1	14,9	20,0	-	-	5,0	F M5x13 T20R	T20R	R TF3.R.51.00 L TF3.L.51.00	
▼ h = 25,0 mm													
25,0	25,0	150,0	**TF3.00.2525.C.15.00 R/L**	R AHUW L ASZ2	19,9	25,0	-	-	5,0	F M5x13 T20R	T20R	R TF3.R.00.00 L TF3.L.00.00	
25,0	25,0	150,0	**TF3.50.2525.C.15.00 R/L**	R AGWG L ASZ3	19,9	25,0	-	-	5,0	F M5x13 T20R	T20R	R TF3.R.50.00 L TF3.L.50.00	
25,0	25,0	150,0	**TF3.51.2525.C.15.00 R/L**	R AMFF L ASZ4	19,9	25,0	-	-	5,0	F M5x13 T20R	T20R	R TF3.R.51.00 L TF3.L.51.00	
▼ h = 1.000“													
1.000“	1.000“	5.906“	**TF3.51.1.000.C.15.00 R**	A3B7	0.799“	1.000“	-	-	0.236“	F M5x13 T20R	T20R	TF3.R.51.00	inch
▼ h = 32,0 mm													
32,0	32,0	150,0	**TF3.50.3232.C.15.00 R/L**	R AS8K L AS8J	26,8	32,0	-	-	5,0	F M5x13 T20R	T20R	R TF3.R.50.00 L TF3.L.50.00	

Order example: **TF3.50.2525.C.15.00 R** (R = Right hand version)

Toolholder, Cranked Style

Toolholder for external Applications.

Tightening torque (screw)

6,0 Nm

TW ST R Legend 27

Scan **QR-Code** Or Visit **www.simtek.info/cp/623**

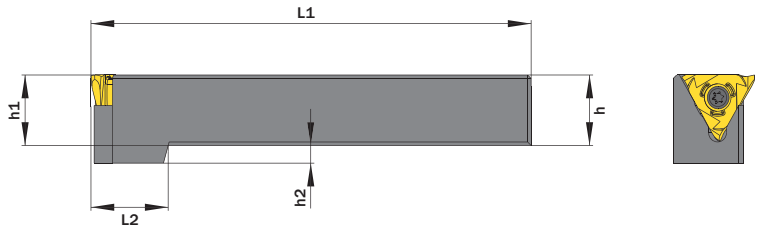

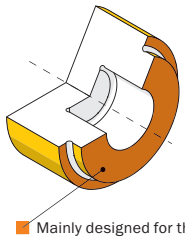

Mainly designed for these Surfaces

Also possible depending on fixation type

Drawing shows: TF3.01.2020.D75.12.00 R

h mm	b mm	L1 mm	Part number	Webcode www.simtek.com/webcode	f mm	h1 js14 mm	h2 mm	L2 mm	Screw	Screw driver	Connectcode www.simtek.com/ccode
16,0	16,0	100,0	**TF3.01.1616.D75.10.00 R**	ATZC	18,5	16,0	4,0	21,0	F M5x13 T20R	T20R	**TF3.L.75.01.04**
20,0	20,0	125,0	**TF3.01.2020.D75.12.00 R**	AQF5	22,5	20,0	5,0	21,0	F M5x13 T20R	T20R	**TF3.L.75.01.04**
25,0	25,0	150,0	**TF3.01.2525.D75.15.00 R/L**	R AUF6 L AUF7	27,5	25,0	-	-	F M5x13 T20R	T20R	R TF3.L.75.01.04 L TF3.R.75.01.04

Order example: **TF3.01.2525.D75.15.00 R** (R = Right hand version)

Toolholder, For Internal Applications, Type A

Toolholder for internal applications. For use in smaller bore diameters.
Depth of cut up to 5,0 mm with maximum width of 2,0 mm.

Tightening torque (screw)

6,0 Nm

TW ST R Legend 27

Scan **QR-Code** Or Visit **www.simtek.info/cp/942**

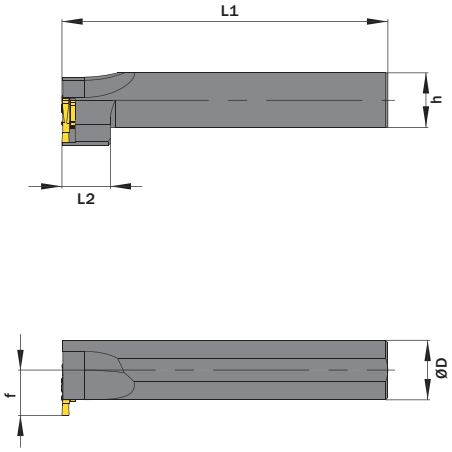

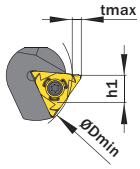

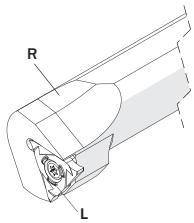

Please use right hand toolholder with left hand insert and vice versa.

Bore diameter (ØDmin)	tmax
Ø46,0 mm / Ø1.811"	2,0 mm / 0.079"
Ø50,0 mm / Ø1.969"	3,0 mm / 0.118"
Ø60,0 mm / Ø2.362"	4,0 mm / 0.158"
Ø100,0 mm / Ø3.937"	5,0 mm / 0.197"

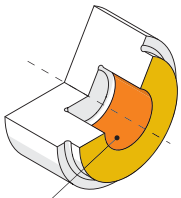

Mainly designed for these Surfaces

Also possible depending on insert type

Drawing shows: TF3.50.0025.A.17.00 R

ØD g6 mm	L1 mm	Part number	Webcode www.simtek.com/webcode	f mm	h mm	h1 js14 mm	L2 mm	Screw	Screw driver	Connectcode www.simtek.com/ccode
▼ ØD = 25,0 mm										
25,0	170,0	**TF3.50.0025.A.17.05 R/L**	R AFQM L AT9H	19,0	23,0	23,0	20,0	F M5x13 T20R	T20R	R TF3.L.50.00 L TF3.R.50.00
25,0	170,0	**TF3.51.0025.A.17.05 R/L**	R AF8J L AT9J	19,0	23,0	23,0	20,0	F M5x13 T20R	T20R	R TF3.L.51.00 L TF3.R.51.00
▼ ØD = 32,0 mm										
32,0	200,0	**TF3.50.0032.A.20.05 R/L**	R AG1E L AT9K	20,0	30,0	30,0	10,0	F M5x13 T20R	T20R	R TF3.L.50.00 L TF3.R.50.00
32,0	200,0	**TF3.51.0032.A.20.05 R/L**	R AEKY L AT9M	20,0	30,0	30,0	10,0	F M5x13 T20R	T20R	R TF3.L.51.00 L TF3.R.51.00

Order example: **TF3.51.0025.A.17.05 R** (R = Right hand version)

Toolholder, For Internal Applications, Type C

Toolholder for internal Applications.

Tightening torque (screw)
6,0 Nm

TW ST R Legend 27

Scan QR-Code Or Visit **www.simtek.info/cp/939**

This page contains inch tools! These tools are indicated by inch on the right hand side.

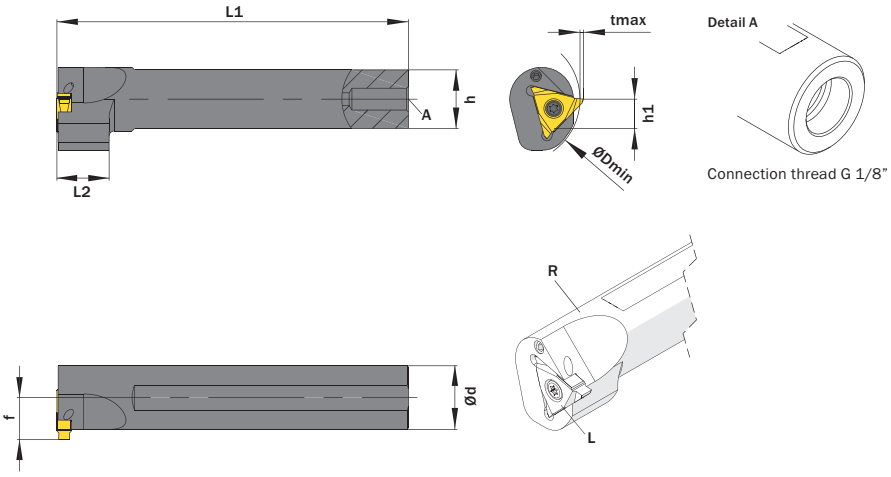

Bore diameter (ØDmin)	tmax
Ø50,0 mm / Ø1.969"	1,5 mm / 0.059"
Ø55,0 mm / Ø2.165"	1,8 mm / 0.071"
Ø60,0 mm / Ø2.362"	2,0 mm / 0.079"
Ø100,0 mm / Ø3.937"	2,5 mm / 0.098"
Ø150,0 mm / Ø5.906"	3,0 mm / 0.118"

Please use right hand toolholder with left hand insert and vice versa.

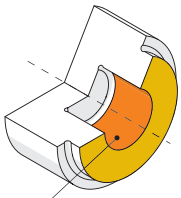

Mainly designed for these Surfaces

Also possible depending on insert type

Drawing shows: TF3.14.0025.C.15.00 R

ØD g6 mm/inch	L1 mm/inch	Part number	Webcode www.simtek.com/webcode	f mm/inch	h mm/inch	h1 js14 mm/inch	L2 mm/inch	Screw	Screw driver	Connectcode www.simtek.com/ccode	
▼ h = 23,0 mm											
25,0	150,0	**TF3.14.0025.C.15.00 R/L**	R AT6W L AXZ0	16,5	23,0	20,0	20,0	F M5x13 T20R	T20R	R TF3.L.14.00 L TF3.R.14.00	
▼ h = 0.921"											
0.921"	6.000"	**TF3.14.1.000.C.15.00 R/L**	R AT6V L AXZ3	0.667"	0.921"	0.787"	0.787"	F M5x13 T20R	T20R	R TF3.L.14.00 L TF3.R.14.00	inch
▼ h = 30,0 mm											
32,0	200,0	**TF3.14.0032.C.20.00 R/L**	R AT6X L AXZ1	19,5	30,0	20,0	20,0	F M5x13 T20R	T20R	R TF3.L.14.00 L TF3.R.14.00	
▼ h = 38,0 mm											
40,0	250,0	**TF3.14.0040.C.25.00 R/L**	R AT6Y L AXZ2	23,5	38,0	20,0	20,0	F M5x13 T20R	T20R	R TF3.L.14.00 L TF3.R.14.00	

Order example: **TF3.14.0025.C.15.00 R** (R = Right hand version)

Cassette for Modular Tool System TOA

For use on SIMTEK base toolholder with polygon shank according to ISO 26623.

Tightening torque (screw)
6,0 Nm

TW ST R Legend 27

Scan QR-Code Or Visit **www.simtek.info/cp/1190**

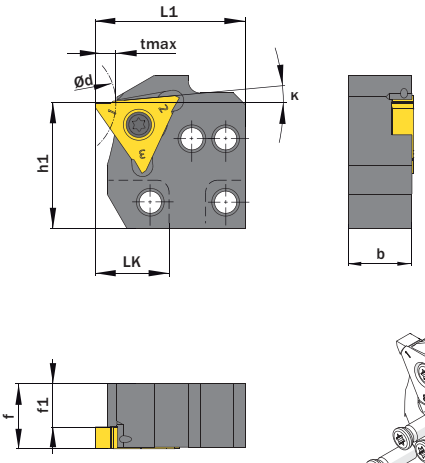

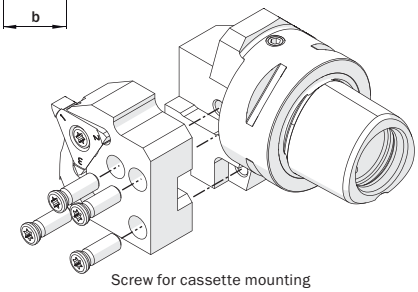

Screw for cassette mounting
T M5x15 T20R

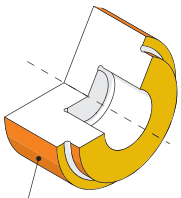

Mainly designed for these surfaces

Also possible depending on insert/fixation type

Drawing shows: TOA.TF3.50.A.19.05 R

κ	LK mm	Part number	Webcode www.simtek.com/webcode				b mm	Ød mm	f mm	f1 mm	h1 mm	L1 mm	tmax mm	Screw	Screw driver	Connectcode www.simtek.com/ccode				Adaptcode
0°	19,0	**TOA.TF3.00.A.19.05 R/L**	R	AY97	L	AZAS	16,0	100,0	16,4	10,9	31,6	37,9	5,0	F M5x13 T20R	T20R	R	TF3.R.00.00	L	TF3.L.00.00	TOA
0°	19,0	**TOA.TF3.01.A.19.05 R/L**	R	AY55	L	AZBQ	16,0	100,0	16,4	10,9	31,6	37,9	5,0	F M5x13 T20R	T20R	R	TF3.R.01.00	L	TF3.L.01.00	TOA
0°	29,0	**TOA.TF3.01.A.29.05 R/L**	R	AZBT	L	AZBS	16,0	100,0	16,4	10,9	31,6	37,9	5,0	F M5x13 T20R	T20R	R	TF3.R.01.00	L	TF3.L.01.00	TOA
5°	19,0	**TOA.TF3.50.A.19.05 R/L**	R	AZAU	L	AZAT	16,0	100,0	16,4	10,9	31,6	37,9	5,0	F M5x13 T20R	T20R	R	TF3.R.50.00	L	TF3.L.50.00	TOA

Order example: **TOA.TF3.01.A.19.05 R** (R = Right hand version)

Cassette for Modular Tool System TOA

For use on SIMTEK base toolholder with polygon shank according to ISO 26623.

Tightening torque (screw)

6,0 Nm

TW ST R Legend **27**

Scan **QR-Code** Or Visit **www.simtek.info/cp/1188**

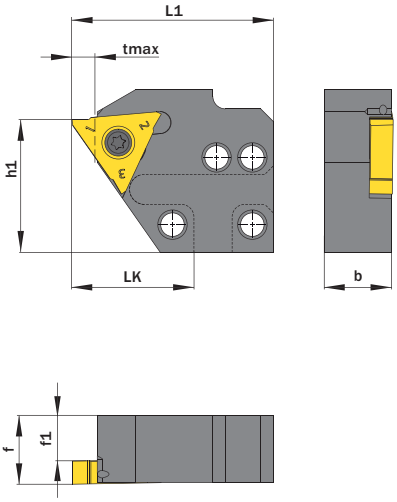

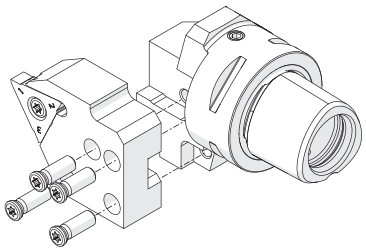

Screw for cassette mounting
T M5x15 T20R

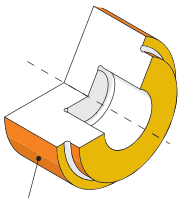

Mainly designed for these surfaces

Also possible depending on insert/fixation type

Drawing shows: TOA.TF3.51.C.29.05 R

Part number	Webcode www.simtek.com/webcode	b mm	f mm	f1 mm	h1 mm	LK mm	L1 mm	tmax mm	Screw	Screw driver	Connectcode www.simtek.com/ccode	Adaptcode
TOA.TF3.51.C.29.05 R/L	R AZAQ L AZAP	16,0	16,4	10,9	31,6	29,0	47,9	5,5	F M5x13 T20R	T20R	R TF3.R.51.00 L TF3.L.51.00	TOA

Order example: **TOA.TF3.51.C.29.05 R** (R = Right hand version)

Cassette with Connectcode „TF3.R.51.00“ und „TF3.L.51.00“ are provided for customized cutting tools.

Cassette for Modular Tool System TOA

For use on SIMTEK base toolholder with polygon shank according to ISO 26623.

Tightening torque (screw)
6,0 Nm

TW ST | R | Legend 27

Scan **QR-Code** Or Visit **www.simtek.info/cp/1185**

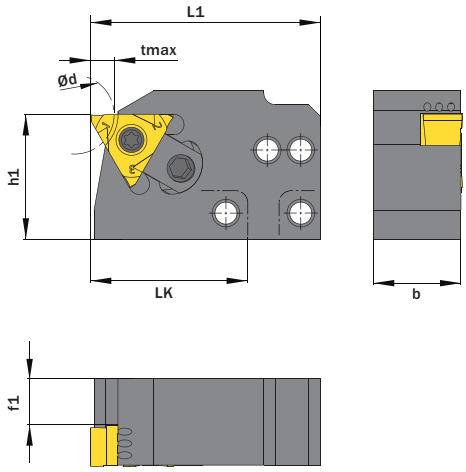

Drawing shows: TOA.TF3.00.B.39.10 R

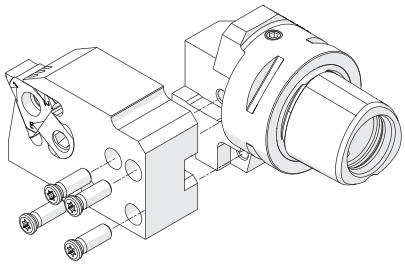

Screw for cassette mounting
T M5x15 T20R

tmax depends from Workpiece diameter (Ød)	tmax
up to Ø20,0 mm / up to Ø0.787"	6,0 mm / 0.236"
up to Ø30,0 mm / up to Ø1.181"	4,5 mm / 0.177"
up to Ø40,0 mm / up to Ø1.575"	4,0 mm / 0.158"
up to Ø50,0 mm / up to Ø1.969"	3,5 mm / 0.138"
up to Ø60,0 mm / up to Ø2.362"	3,5 mm / 0.138"
up to Ø100,0 mm / up to Ø3.937"	3,0 mm / 0.118"

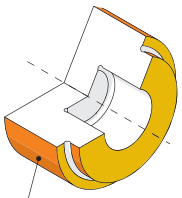

Mainly designed for these surfaces

Also possible depending on insert/fixation type

Part number	Webcode www.simtek.com/webcode	b mm	f1 mm	h1 mm	LK mm	L1 mm	Screw	Screw driver	Clamp	Connectcode www.simtek.com/ccode	Adaptcode
TOA.TF3.00.B.39.06 R/L	R AZAH L AZAG	22,0	15,7	31,6	39,5	58,4	F M5x13 T20R	T20R	F22.06.11	R TF3.L.00.06 L TF3.R.00.06	TOA
TOA.TF3.00.B.39.08 R/L	R AZAK L AZAJ	22,0	13,7	31,6	39,5	58,4	F M5x13 T20R	T20R	F22.08.11	R TF3.L.00.08 L TF3.R.00.08	TOA
TOA.TF3.00.B.39.10 R/L	R AZAN L AZAM	22,0	11,7	31,6	39,5	58,4	F M5x13 T20R	T20R	F22.10.11	R TF3.L.00.10 L TF3.R.00.10	TOA

Order example: **TOA.TF3.00.B.39.10 R** (R = Right hand version)

Cassette with Connectcode „TF3.R.51.00" and „TF3.L.51.00" are provided for customized cutting tools.

Height-Adjustable Cassette for Back Operations

Cassette for height-adjustable back operations tools.
Compatible to TOG-system by precium.

Tightening torque (screw)

7,0 Nm

TW ST R Legend 27

Scan **QR-Code** Or Visit **www.simtek.info/cp/1222**

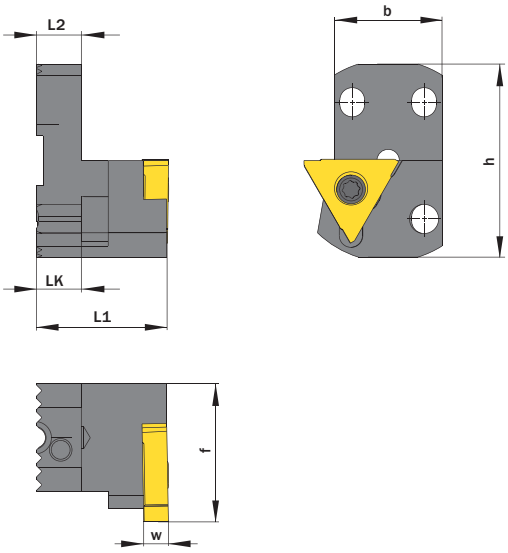

Drawing shows: TOG.K.TF3.01.A1 R

More information on www.precium.de

Illustration only

With through coolant supply	Part number	Webcode www.simtek.com/webcode	b mm	h mm	f mm	L1 mm	L2 mm	LK mm	w mm	Screw	Screw driver	Connectcode www.simtek.com/ccode
No	**TOG.K.TF3.01.A1 R/L**	R AZHN L AZHM	24,0	43,0	30,75	29,0	10,0	10,0	5,5	TF3 M5x15 T20R	T20R	R TF3.R.01.00 L TF3.L.01.00
Yes	**TOG.K.TF3.01.B1 R/L**	R AZHS L AZHQ	24,0	43,0	30,75	46,0	27,0	10,0	5,5	TF3 M5x15 T20R	T20R	R TF3.R.01.00 L TF3.L.01.00

Order example: **TOG.K.TF3.01.A1 R** (R = Right hand version)

Turning, Cutting Edge Design „E“

Cutting edge design „E“, for high performance and chip control.

Cutting parameters (start)	
f **0,08 mm/U**	Vc **Page 40**

Suitable toolholders on page
5, 7, 12, 15

SP HM R Legend **27**

Scan **QR-Code** Or Visit **www.simtek.info/cp/1018**

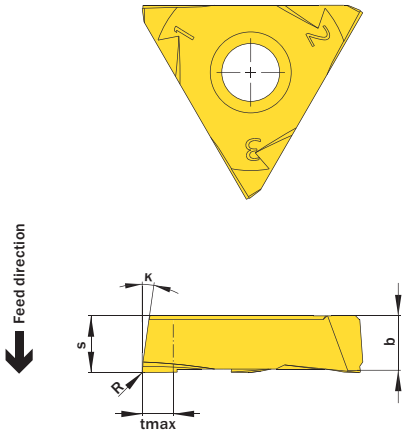

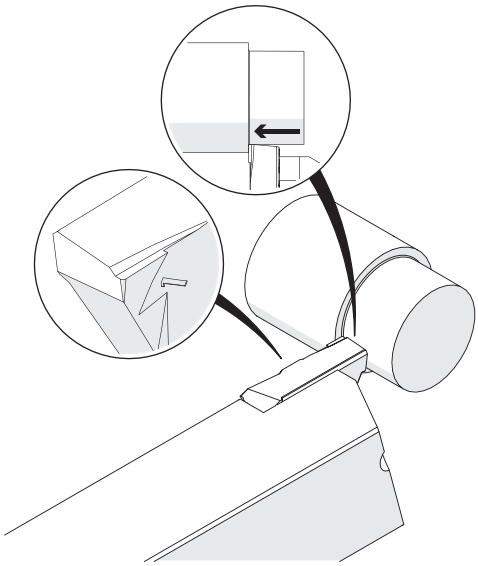

Drawing shows: TF3.01.008.10.020 YER

κ	R mm	Part number	Webcode www.simtek.com/webcode				Our first choice P K M N S		b mm	S mm	tmax mm	Connectcode www.simtek.com/ccode			
8°	0,2	**TF3.01.008.10.020 YER/L**	R	AWZD	L	AWZC	X802	X602	5,2	5,5	3,0	R	TF3.R.01.00	L	TF3.L.01.00
8°	0,4	**TF3.01.008.10.040 YER/L**	R	AWZF	L	AWZE	X800	X602	5,2	5,5	3,0	R	TF3.R.01.00	L	TF3.L.01.00

Order example: **TF3.01.008.10.040 YER X802** (R = Right hand version, X802 = Grade)

Turning, Cutting Edge Design Type E with WIPER-Geometry

WIPER-geometry offers better surface quality at equal feed rates or doubled feed rates at equal surface quality.

Cutting parameters (start)	
f **0,08 mm/U**	Vc **Page 40**

Suitable toolholders on page
5, 7, 12, 15

SP HM R Legend **27**

Scan **QR-Code** Or Visit **www.simtek.info/cp/1027**

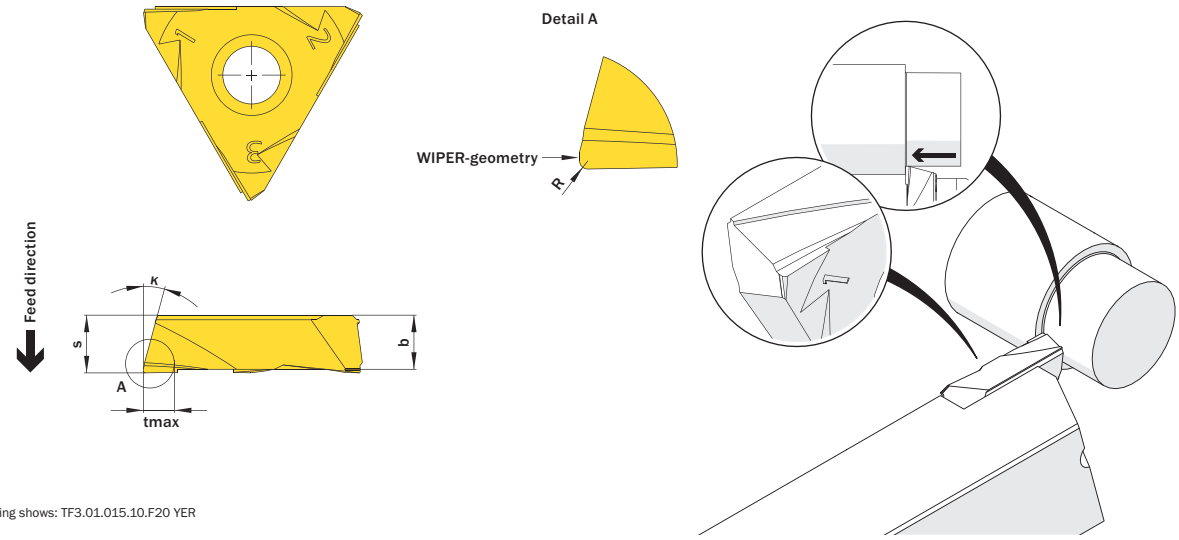

Drawing shows: TF3.01.015.10.F20 YER

κ	R mm	Part number	Webcode www.simtek.com/webcode	Our first choice P K M N S	b mm	s mm	tmax mm	Connectcode www.simtek.com/ccode
15°	0,2	**TF3.01.015.10.F20 YER/L**	R AWZH L AWZG	X802 X602	5,2	5,5	3,0	R TF3.R.01.00 L TF3.L.01.00
15°	0,4	**TF3.01.015.10.F40 YER/L**	R AWZK L AWZJ	X802 X602	5,2	5,5	3,0	R TF3.R.01.00 L TF3.L.01.00

Order example: **TF3.01.015.10.F40 YER X802** (R = Right hand version, X802 = Grade)

Turning and Profiling, Cutting Edge Design „E“

Cutting edge design „E“, for high performance and chip control.

Cutting parameters (start)	
f **0,08 mm/U**	Vc **Page 40**

Suitable toolholders on page
5, 7, 12, 15

SP HM R Legend **27**

Scan **QR-Code** Or Visit **www.simtek.info/cp/1028**

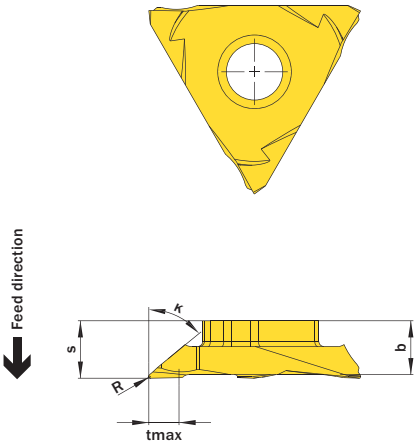

Drawing shows: TF3.01.050.10.020 YER

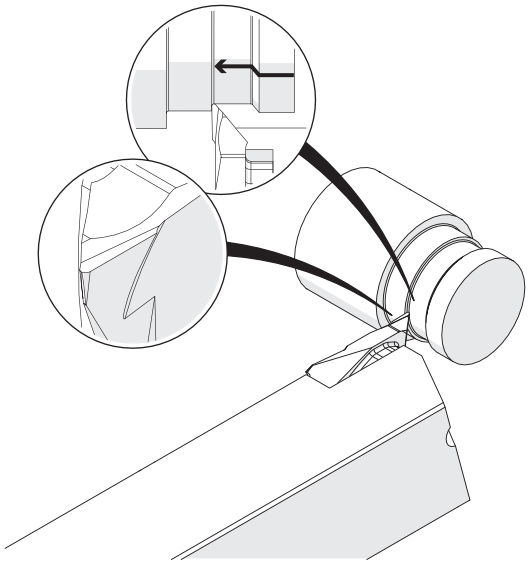

κ	R mm	Part number	Webcode www.simtek.com/webcode	Our first choice P K M N S	b mm	S mm	tmax mm	Connectcode www.simtek.com/ccode
▼ κ = 30°								
30°	0,2	**TF3.01.030.10.020 YER/L**	R AWZV L AWZU	X802 X602	5,2	5,5	3,0	R TF3.R.01.00 L TF3.L.01.00
30°	0,4	**TF3.01.030.10.040 YER/L**	R AWZX L AWZW	X802 X602	5,2	5,5	3,0	R TF3.R.01.00 L TF3.L.01.00
▼ κ = 50°								
50°	0,2	**TF3.01.050.10.020 YER/L**	R AWZ3 L AWZ2	X802 X602	5,3	5,6	3,0	R TF3.R.01.00 L TF3.L.01.00
50°	0,4	**TF3.01.050.10.040 YER/L**	R AWZ5 L AWZ4	X802 X602	5,3	5,6	3,0	R TF3.R.01.00 L TF3.L.01.00

Order example: **TF3.01.050.10.020 YER X802** (R = Right hand version, X802 = Grade)

Back Turning

Indexable insert for back turning as well as for turning „behind shoulder“.

Cutting parameters (start)	
f **0,08 mm/U**	Vc **Page 40**

Suitable toolholders on page
5, 7, 12, 15

SP HM R Legend **27**

Scan **QR-Code** Or Visit **www.simtek.info/cp/1075**

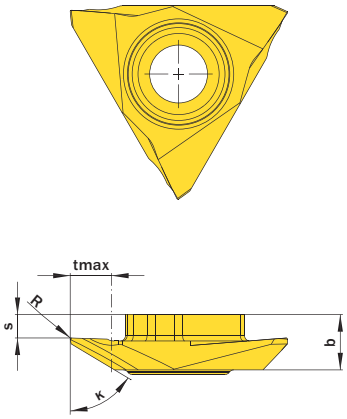

Drawing shows: TF3.059.02.06.020 YY R

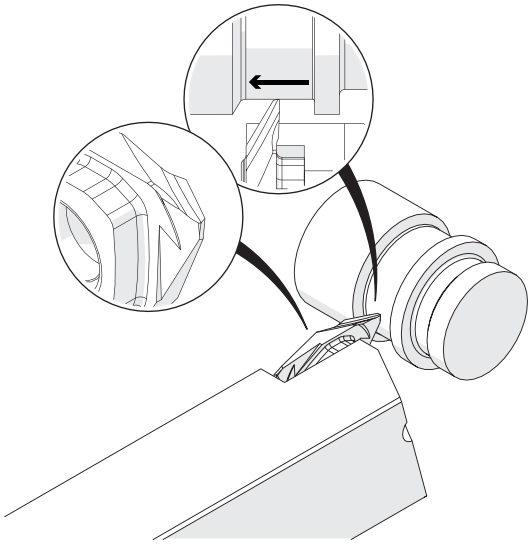

κ	R mm	Part number	Webcode www.simtek.com/webcode	Our first choice P K M N S	b mm	S mm	tmax mm	Connectcode www.simtek.com/ccode
59°	0,2	**TF3.01.059.26.020 YYR/L**	R AXTH L AXTJ	X800 X600	5,35	2,26	4,0	R TF3.R.01.00 L TF3.L.01.00
59°	0,4	**TF3.01.059.26.040 YYR/L**	R AXTK L AXTM	X800 X600	5,35	2,26	4,0	R TF3.R.01.00 L TF3.L.01.00

Order example: **TF3.01.059.26.020 YYR X800** (R = Right hand version, X800 = Grade)

Grooving, Cutting Edge Design Type „E“

Cutting edge design type „E“, for high performance and chip control.

Cutting parameters (start)	
f **0,08 mm/U**	Vc **Page 40**

Suitable toolholders on page
5, 7, 12, 15

SP HM R Legend **27**

Scan **QR-Code** Or Visit **www.simtek.info/cp/1029**

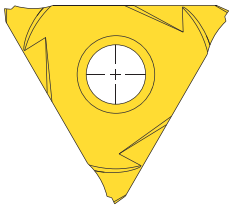

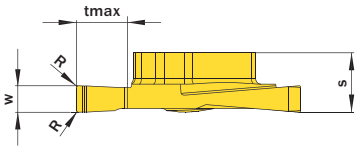

Drawing shows: TF3.01.0250.020 NER

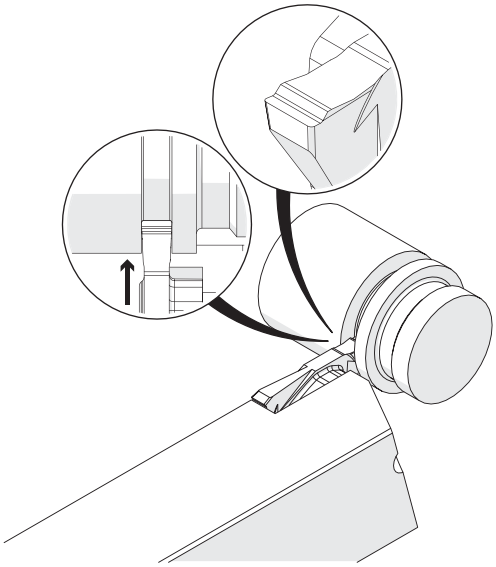

w ±0.02 mm	R mm	Part number	Webcode www.simtek.com/webcode				Our first choice P K M N S		S mm	tmax mm	Connectcode www.simtek.com/ccode			
1,5	0,2	**TF3.01.0150.020 NER/L**	R	AWZN	L	AWZM	X802	X602	5,5	5,0	R	TF3.R.01.00	L	TF3.L.01.00
1,8	0,2	**TF3.01.0180.020 NER/L**	R	AX72	L	AYV4	X802	X602	5,5	5,0	R	TF3.R.01.00	L	TF3.L.01.00
2,0	0,2	**TF3.01.0200.020 NER/L**	R	AWZQ	L	AWZP	X802	X602	5,5	5,0	R	TF3.R.01.00	L	TF3.L.01.00
2,5	0,2	**TF3.01.0250.020 NER/L**	R	AWZT	L	AWZS	X802	X602	5,5	5,0	R	TF3.R.01.00	L	TF3.L.01.00
3,0	0,2	**TF3.01.0300.020 NER/L**	R	AWZZ	L	AWZY	X802	X602	5,5	5,0	R	TF3.R.01.00	L	TF3.L.01.00
4,0	0,2	**TF3.01.0400.020 NER/L**	R	AWZ1	L	AWZ0	X802	X602	5,5	5,0	R	TF3.R.01.00	L	TF3.L.01.00
5,0	0,2	**TF3.01.0500.020 NER/L**	R	AWZ7	L	AWZ6	X802	X602	5,5	5,0	R	TF3.R.01.00	L	TF3.L.01.00

Order example: **TF3.01.0400.020 NER X802** (R = Right hand version, X802 = Grade)

Grooving and Profiling

CNC Profiling.

Cutting parameters (start)	
f **0,08 mm/U**	Vc **Page 40**

Suitable toolholders on page
5, 7, 12, 15

SP HM R Legend **27**

Scan **QR-Code** Or Visit **www.simtek.info/cp/1262**

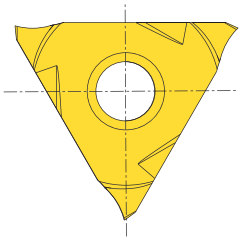

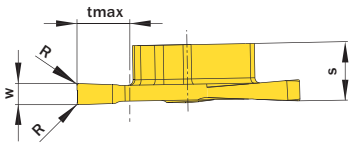

Drawing shows: TF3.01.0200.020 NS R

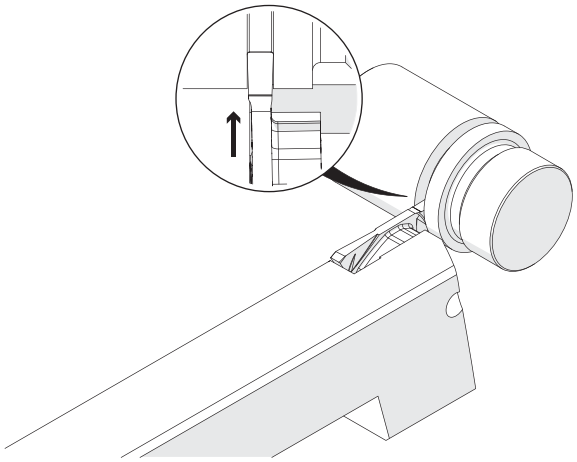

w ±0.02 mm	R mm	Part number	Webcode www.simtek.com/webcode	Our first choice P K M N S	S mm	tmax mm	Connectcode www.simtek.com/ccode
1,0	0,2	**TF3.01.0100.020 NSR/L**	R A10V L A197	X808 X608	5,35	5,0	R TF3.R.01.00 L TF3.L.01.00
1,5	0,2	**TF3.01.0150.020 NSR/L**	R A06Q L A06S	X800 X600	5,5	5,0	R TF3.R.01.00 L TF3.L.01.00
2,0	0,2	**TF3.01.0200.020 NSR/L**	R A06N L A06P	X800 X600	5,5	5,0	R TF3.R.01.00 L TF3.L.01.00
2,5	0,2	**TF3.01.0250.020 NSR/L**	R A06K L A06M	X800 X600	5,5	5,0	R TF3.R.01.00 L TF3.L.01.00

Order example: **TF3.01.0100.020 NSR X808** (R = Right hand version, X808 = Grade)

Grooving and Profiling in light alloys

CNC profiling with special geometry for applications in light alloys.

Cutting parameters (start)	
f **0,08 mm/U**	Vc **Page 40**

Suitable toolholders on page
5, 7, 12, 15

SP HM R Legend **27**

Scan **QR-Code** Or Visit **www.simtek.info/cp/1263**

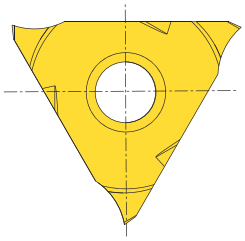

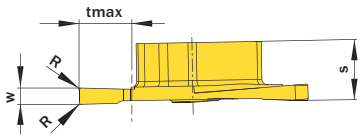

Drawing shows: TF3.01.0150.020 NC R

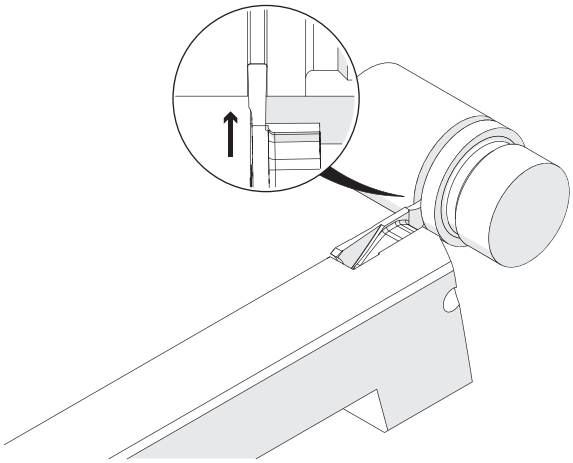

w ±0.02 mm	R mm	Part number	Webcode www.simtek.com/webcode	Our first choice P	K	M	N	S	S mm	tmax mm	Connectcode www.simtek.com/ccode
1,5	0,2	**TF3.01.0150.020 NCR**	A101	X808		X408			5,5	5,0	TF3.R.01.00
2,0	0,2	**TF3.01.0200.020 NCR**	A102	X808		X408			5,5	5,0	TF3.R.01.00

Order example: **TF3.01.0200.020 NCR X808** (R = Right hand version, X808 = Grade)

Grooving, Cutting Edge Design Type „D“

Grooving with ground geometry type „D“ for improved chip control.

Cutting parameters (start)	
f **0,08 mm/U**	Vc **Page 40**

Suitable toolholders on page
5, 7, 12, 15

SP HM R Legend **27**

Scan **QR-Code** Or Visit **www.simtek.info/cp/1226**

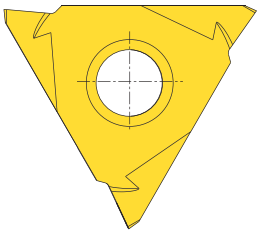

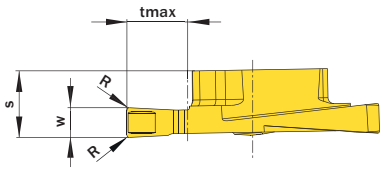

Drawing shows: TF3.01.0250.020 ND R

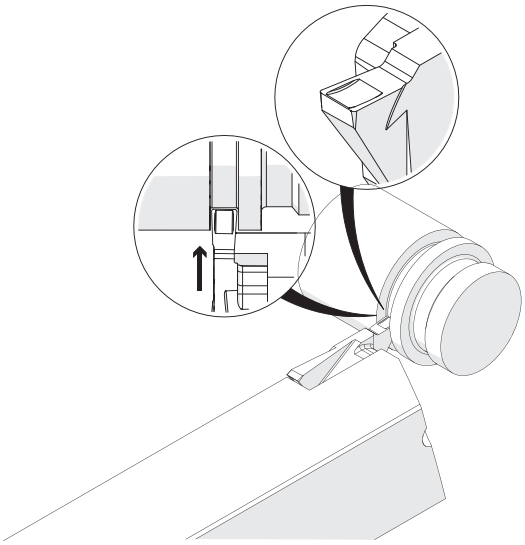

w ±0.02 mm	R mm	Part number	Webcode www.simtek.com/webcode				Our first choice P	K	M	N	S	S mm	tmax mm	Connectcode www.simtek.com/ccode			
1,5	0,2	**TF3.01.0150.020 NDR/L**	R	AZXD	L	AZXC	X800			X600		5,5	5,0	R	TF3.R.01.00	L	TF3.L.01.00
1,8	0,2	**TF3.01.0180.020 NDR/L**	R	AZXE	L	AZXF	X800			X600		5,5	5,0	R	TF3.R.01.00	L	TF3.L.01.00
2,0	0,2	**TF3.01.0200.020 NDR/L**	R	AZXH	L	AZXG	X800			X600		5,5	5,0	R	TF3.R.01.00	L	TF3.L.01.00
2,5	0,2	**TF3.01.0250.020 NDR/L**	R	AZXJ	L	AZXK	X800			X600		5,5	5,0	R	TF3.R.01.00	L	TF3.L.01.00
3,0	0,2	**TF3.01.0300.020 NDR/L**	R	AZXN	L	AZXM	X800			X600		5,5	5,0	R	TF3.R.01.00	L	TF3.L.01.00
4,0	0,2	**TF3.01.0400.020 NDR/L**	R	AZXP	L	AZXQ	X800			X600		5,5	5,0	R	TF3.R.01.00	L	TF3.L.01.00
5,0	0,2	**TF3.01.0500.020 NDR/L**	R	AZXT	L	AZXS	X800			X600		5,5	5,0	R	TF3.R.01.00	L	TF3.L.01.00

Order example: **TF3.01.0150.020 NDR X800** (R = Right hand version, X800 = Grade)

Grooving and Profiling, Cutting Edge Design Type „A“

Cutting edge design „A“, for ideal chip control and controlled chip breaking.

Cutting parameters (start)	
f **0,08 mm/U**	Vc **Page 40**

Suitable toolholders on page
5, 7, 12, 15

SP HM R Legend **27**

Scan **QR-Code** Or Visit **www.simtek.info/cp/1240**

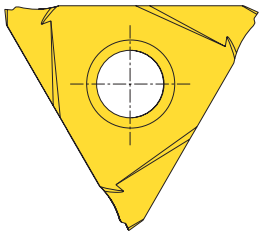

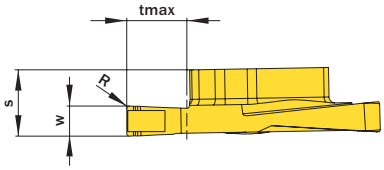

Drawing shows: TF3.01.0250.020 NA R

w ±0.02 mm	R mm	Part number	Webcode www.simtek.com/webcode	Our first choice P K M N S	S mm	tmax mm	Connectcode www.simtek.com/ccode
2,0	0,2	**TF3.01.0200.020 NAR/L**	R AZKA L AZJ9	X802 X602	5,5	5,0	R TF3.R.01.00 L TF3.L.01.00
2,5	0,2	**TF3.01.0250.020 NAR/L**	R AZKC L AZKB	X802 X602	5,5	5,0	R TF3.R.01.00 L TF3.L.01.00
3,0	0,2	**TF3.01.0300.020 NAR/L**	R AZKE L AZKD	X802 X602	5,5	5,0	R TF3.R.01.00 L TF3.L.01.00
4,0	0,2	**TF3.01.0400.020 NAR/L**	R AZKG L AZKF	X802 X602	5,5	5,0	R TF3.R.01.00 L TF3.L.01.00
5,0	0,2	**TF3.01.0500.020 NAR/L**	R AZKJ L AZKH	X802 X602	5,5	5,0	R TF3.R.01.00 L TF3.L.01.00

Order example: **TF3.01.0500.020 NAR X802** (R = Right hand version, X802 = Grade)

Face Thread Reliefs

Suitable for thread Reliefs. Mounted in a 45° Toolholder.

Cutting parameters (start)	
f **0,08 mm/U**	Vc **Page 40**

Suitable toolholders on page
9

SP HM R Legend **27**

Scan **QR-Code** Or Visit **www.simtek.info/cp/1086**

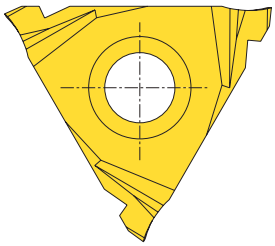

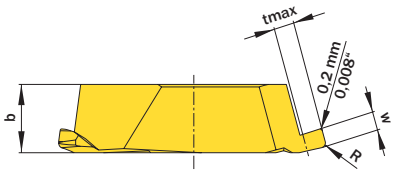

Drawing shows: TF3.01.L0815.75.04 FR

ØDmin (min. bore)	w	R	Part number	Webcode www.simtek.com/webcode	Our first choice					b	tmax	Connectcode www.simtek.com/ccode
mm	mm	mm			P	K	M	N	S	mm	mm	
8,0	1,5	0,4	**TF3.01.L0815.75.04 FR**	AXUN	X800		X600			5,45	1,6	TF3.R.75.01.04
12,0	2,0	0,5	**TF3.01.L1220.75.05 FR**	AXUP	X800		X600			5,45	1,8	TF3.R.75.01.04
20,0	2,4	0,6	**TF3.01.L2024.75.06 FR**	AXUQ	X800		X600			5,45	2,0	TF3.R.75.01.04

Order example: **TF3.01.L2024.75.06 FR X800** (R = Right hand version, X800 = Grade)

Face Thread Reliefs

Suitable for thread reliefs. Mounted in a 45° toolholder.

Cutting parameters (start)	
f **0,08 mm/U**	Vc **Page 40**

Suitable toolholders on page
6

SP HM L Legend **27**

Scan **QR-Code** Or Visit **www.simtek.info/cp/1127**

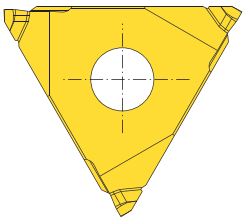

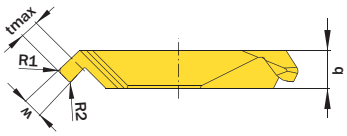

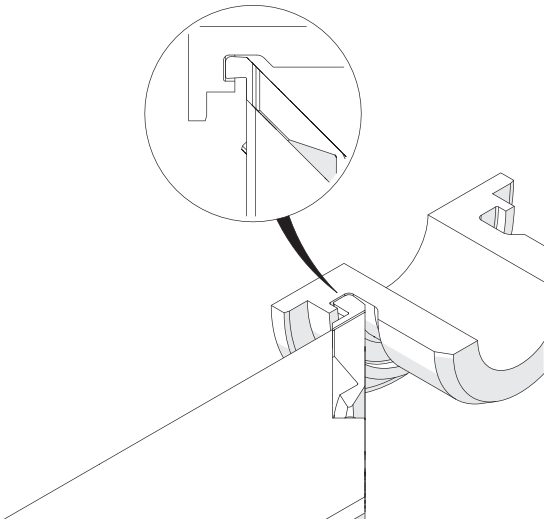

Drawing shows: TF3.00.0815.45.04 E L

ØDmin (min. bore) mm	w mm	R1 mm	Part number	Webcode www.simtek.com/webcode	Our first choice P K M N S	R2 mm	b mm	tmax mm	Connectcode www.simtek.com/ccode
8,0	1,5	0,2	**TF3.00.0815.45.02 E R/L**	R A4TF L A1GA	X800 X600	0,2	3,3	1,6	R TF3.L.45.00.03 L TF3.R.45.00.03
8,0	1,5	0,4	**TF3.00.0815.45.04 E R/L**	R A4TH L AYJV	X800 X600	0,2	3,3	1,6	R TF3.L.45.00.03 L TF3.R.45.00.03
12,0	2,0	0,2	**TF3.00.1220.45.02 E R/L**	R A4TK L A1EJ	X800 X600	0,2	3,3	2,0	R TF3.L.45.00.03 L TF3.R.45.00.03
12,0	2,0	0,5	**TF3.00.1220.45.05 E R/L**	R A4TN L AYJW	X800 X600	0,2	3,3	2,0	R TF3.L.45.00.03 L TF3.R.45.00.03
20,0	2,4	0,6	**TF3.00.2024.45.06 E R/L**	R A4TQ L AYJX	X800 X600	0,2	3,3	2,0	R TF3.L.45.00.03 L TF3.R.45.00.03

Order example: **TF3.00.2024.45.06 E R X800** (R = Right hand version, X800 = Grade)

Legend

SP HM **Carbide insert**

TW ST **Steel toolholder**

L **Left hand version shown**

R **Right hand version shown, left hand version inversely**

Through coolant

Tools for highest expectations
SIMTEK

simturn FX Product list

Part Nr.	P
TF3.00.062S.D.45.10.00 R	6
TF3.00.075S.D.45.12.00 R	6
TF3.00.0815.45.02 E L	26
TF3.00.0815.45.02 E R	26
TF3.00.0815.45.04 E L	26
TF3.00.0815.45.04 E R	26
TF3.00.100S.D.45.15.00 R	6
TF3.00.1220.45.02 E L	26
TF3.00.1220.45.02 E R	26
TF3.00.1220.45.05 E L	26
TF3.00.1220.45.05 E R	26
TF3.00.1616.C.12.00 L	8
TF3.00.1616.C.12.00 R	8
TF3.00.1616.D.45.10.00 L	6
TF3.00.1616.D.45.10.00 R	6
TF3.00.2020.C.12.00 L	8
TF3.00.2020.C.12.00 R	8
TF3.00.2020.D.45.12.00 L	6
TF3.00.2020.D.45.12.00 R	6
TF3.00.2024.45.06 E L	26
TF3.00.2024.45.06 E R	26
TF3.00.2525.C.15.00 L	8
TF3.00.2525.C.15.00 R	8
TF3.00.2525.D.45.15.00 L	6
TF3.00.2525.D.45.15.00 R	6
TF3.01.0.625.A.12.00 R	5
TF3.01.008.10.020 YEL	16
TF3.01.008.10.020 YER	16
TF3.01.008.10.040 YEL	16
TF3.01.008.10.040 YER	16
TF3.01.0100.020 NSL	21
TF3.01.0100.020 NSR	21
TF3.01.015.10.F20 YEL	17
TF3.01.015.10.F20 YER	17
TF3.01.015.10.F40 YEL	17
TF3.01.015.10.F40 YER	17
TF3.01.0150.020 NCR	22
TF3.01.0150.020 NDL	23
TF3.01.0150.020 NDR	23
TF3.01.0150.020 NEL	20
TF3.01.0150.020 NER	20
TF3.01.0150.020 NSL	21
TF3.01.0150.020 NSR	21
TF3.01.0180.020 NDL	23
TF3.01.0180.020 NDR	23
TF3.01.0180.020 NEL	20
TF3.01.0180.020 NER	20
TF3.01.0200.020 NAL	24
TF3.01.0200.020 NAR	24
TF3.01.0200.020 NCR	22
TF3.01.0200.020 NDL	23
TF3.01.0200.020 NDR	23
TF3.01.0200.020 NEL	20
TF3.01.0200.020 NER	20
TF3.01.0200.020 NSL	21
TF3.01.0200.020 NSR	21
TF3.01.0250.020 NAL	24
TF3.01.0250.020 NAR	24
TF3.01.0250.020 NDL	23
TF3.01.0250.020 NDR	23
TF3.01.0250.020 NEL	20
TF3.01.0250.020 NER	20
TF3.01.0250.020 NSL	21
TF3.01.0250.020 NSR	21
TF3.01.030.10.020 YEL	18
TF3.01.030.10.020 YER	18

Part Nr.	P
TF3.01.030.10.040 YEL	18
TF3.01.030.10.040 YER	18
TF3.01.0300.020 NAL	24
TF3.01.0300.020 NAR	24
TF3.01.0300.020 NDL	23
TF3.01.0300.020 NDR	23
TF3.01.0300.020 NEL	20
TF3.01.0300.020 NER	20
TF3.01.0400.020 NAL	24
TF3.01.0400.020 NAR	24
TF3.01.0400.020 NDL	23
TF3.01.0400.020 NDR	23
TF3.01.0400.020 NEL	20
TF3.01.0400.020 NER	20
TF3.01.050.10.020 YEL	18
TF3.01.050.10.020 YER	18
TF3.01.050.10.040 YEL	18
TF3.01.050.10.040 YER	18
TF3.01.0500.020 NAL	24
TF3.01.0500.020 NAR	24
TF3.01.0500.020 NDL	23
TF3.01.0500.020 NDR	23
TF3.01.0500.020 NEL	20
TF3.01.0500.020 NER	20
TF3.01.059.26.020 YYL	19
TF3.01.059.26.020 YYR	19
TF3.01.059.26.040 YYL	19
TF3.01.059.26.040 YYR	19
TF3.01.075S.A.10.08 CG R	7
TF3.01.1.000.A.15.00 R	5
TF3.01.100S.A.10.08 CG R	7
TF3.01.100S.A.10.10 CG R	7
TF3.01.1212.A.10.00 CG L	7
TF3.01.1212.A.10.00 CG R	7
TF3.01.1212.A.10.00 L	5
TF3.01.1212.A.10.00 R	5
TF3.01.1616.A.10.00 CG L	7
TF3.01.1616.A.10.00 CG R	7
TF3.01.1616.A.12.00 L	5
TF3.01.1616.A.12.00 R	5
TF3.01.1616.A.12.08 L	5
TF3.01.1616.A.12.08 R	5
TF3.01.1616.D75.10.00 R	9
TF3.01.2020.A.10.00 CG L	7
TF3.01.2020.A.10.00 CG R	7
TF3.01.2020.A.10.08 CG L	7
TF3.01.2020.A.10.08 CG R	7
TF3.01.2020.A.10.10 CG L	7
TF3.01.2020.A.10.10 CG R	7
TF3.01.2020.A.12.00 L	5
TF3.01.2020.A.12.00 R	5
TF3.01.2020.A.12.08 L	5
TF3.01.2020.A.12.08 R	5
TF3.01.2020.A.12.10 L	5
TF3.01.2020.A.12.10 R	5
TF3.01.2020.D75.12.00 R	9
TF3.01.2525.A.10.00 CG L	7
TF3.01.2525.A.10.00 CG R	7
TF3.01.2525.A.10.08 CG L	7
TF3.01.2525.A.10.08 CG R	7
TF3.01.2525.A.15.00 L	5
TF3.01.2525.A.15.00 R	5
TF3.01.2525.A.15.08 L	5
TF3.01.2525.A.15.08 R	5
TF3.01.2525.D75.15.00 L	9
TF3.01.2525.D75.15.00 R	9

Part Nr.	P
TF3.01.L0815.75.04 FR	25
TF3.01.L1220.75.05 FR	25
TF3.01.L2024.75.06 FR	25
TF3.14.0025.C.15.00 L	11
TF3.14.0025.C.15.00 R	11
TF3.14.0032.C.20.00 L	11
TF3.14.0032.C.20.00 R	11
TF3.14.0040.C.25.00 L	11
TF3.14.0040.C.25.00 R	11
TF3.14.1.000.C.15.00 L	11
TF3.14.1.000.C.15.00 R	11
TF3.50.0025.A.17.05 L	10
TF3.50.0025.A.17.05 R	10
TF3.50.0032.A.20.05 L	10
TF3.50.0032.A.20.05 R	10
TF3.50.1616.C.12.00 L	8
TF3.50.1616.C.12.00 R	8
TF3.50.2020.A.12.00 L	5
TF3.50.2020.A.12.00 R	5
TF3.50.2020.C.12.00 L	8
TF3.50.2020.C.12.00 R	8
TF3.50.2525.A.15.00 L	5
TF3.50.2525.A.15.00 R	5
TF3.50.2525.C.15.00 L	8
TF3.50.2525.C.15.00 R	8
TF3.50.3225.A.15.00 L	5
TF3.50.3225.A.15.00 R	5
TF3.50.3232.C.15.00 L	8
TF3.50.3232.C.15.00 R	8
TF3.51.0.750.C.12.00 R	8
TF3.51.0025.A.17.05 L	10
TF3.51.0025.A.17.05 R	10
TF3.51.0032.A.20.05 L	10
TF3.51.0032.A.20.05 R	10
TF3.51.1.000.C.15.00 R	8
TF3.51.100S.D.90.15.00 L	6
TF3.51.100S.D.90.15.00 R	6
TF3.51.1616.A.12.00 L	5
TF3.51.1616.A.12.00 R	5
TF3.51.1616.C.12.00 L	8
TF3.51.1616.C.12.00 R	8
TF3.51.2020.A.12.00 L	5
TF3.51.2020.A.12.00 R	5
TF3.51.2020.C.12.00 L	8
TF3.51.2020.C.12.00 R	8
TF3.51.2020.D.90.12.00 L	6
TF3.51.2020.D.90.12.00 R	6
TF3.51.2525.A.15.00 L	5
TF3.51.2525.A.15.00 R	5
TF3.51.2525.C.15.00 L	8
TF3.51.2525.C.15.00 R	8
TF3.51.2525.D.90.15.00 L	6
TF3.51.2525.D.90.15.00 R	6
TOA.F22.V1.06 L	10
TOA.F22.V1.06 R	10
TOA.F22.V1.08 L	10
TOA.F22.V1.08 R	10
TOA.F22.V1.10 L	10
TOA.F22.V1.10 R	10
TOA.F56.V1.51 L	9
TOA.F56.V1.51 R	9
TOA.F56.V3.50 L	8
TOA.F56.V3.50 R	8
TOA.TF3.00.A.19.05 L	12
TOA.TF3.00.A.19.05 R	12
TOA.TF3.00.B.39.06 L	14

Part Nr.	P
TOA.TF3.00.B.39.06 R	14
TOA.TF3.00.B.39.08 L	14
TOA.TF3.00.B.39.08 R	14
TOA.TF3.00.B.39.10 L	14
TOA.TF3.00.B.39.10 R	14
TOA.TF3.01.A.19.05 L	12
TOA.TF3.01.A.19.05 R	12
TOA.TF3.01.A.29.05 L	12
TOA.TF3.01.A.29.05 R	12
TOA.TF3.50.A.19.05 L	12
TOA.TF3.50.A.19.05 R	12
TOA.TF3.51.C.29.05 L	13
TOA.TF3.51.C.29.05 R	13
TOG.K.TF3.01.A1 L	15
TOG.K.TF3.01.A1 R	15
TOG.K.TF3.01.B1 L	15
TOG.K.TF3.01.B1 R	15

Tools for highest expectations
SIMTEK

Information About The Cutting Parameters

Cutting speed recommendation as of page 30

General information about the cutting parameters recommendations

The given cutting parameters for speed and feed rates are ment as initial start values and are estimated for standard application conditions.
The best parameters depend on a wide variety of machine, workpiece and tool related conditions, for example the general machine condition, and can be above or below the given start values.

Example factors of influence and their effect on the cutting parameters

Reduce values	Increase values
Difficult machine and clamping conditions	Solid machine and clamping conditions
Difficult to machine materials	Easy to machine materials
Long tool reach (L2)	Small tool reach (L2)
No chip form geometry	With chip form geometry

List not complete

Suitability of cutting grades in relation to work piece hardness

Grade	Recommended up to approx.
X8*	HRC52
*T90 / *T91	HRC62
CBN	HRC65 (Depending on application)

Tools for highest expectations
SIMTEK

Cutting Speed Recommendation

ISO-Group	Recommended Cutting Grade	Work piece material	Sub-group	Alternative cutting grade	Vc m/min (Start)
P	X800 X802 X804 X808	Steel, unalloyed	≤ 0,15 % C	X400 / X600	210
			0,15 - 0,4 % C	X400 / X600	190
			≥ 0,4 % C	X400 / X600	180
		Steel, low alloyed (alloying elements ≤ 5%)	Non-hardened	X400 / X600	170
			Hardened	X400 / X600	100
		Steel, high alloyed (Alloying elements > 5%)	Annealed	X400 / X600	110
			Hardened	X400 / X600	90
		Castings	Unalloyed	X400 / X600	150
			Low alloyed (Alloying elements ≤ 5%)	X400 / X600	120
			High alloyed (Alloying elements > 5%)	X400 / X600	90
M	X400 / X600 X402 / X602 X404 / X604 X408 / X608	Stainless Steel Ferritic/Martensitic	Non-hardened	*T41	150
			PH-hardened	*T41	110
			Hardened	*T41	110
		Stainless Steel Austenitic	Austenitic	*T41	140
			PH-hardened	*T41	100
			Super Austenitic	*T41	110
		Stainless Steel Austenitic-ferritic (Duplex)	Non-weldable ≥ 0,05 % C	*T41	120
			Weldable < 0,05 % C	*T41	100
		Stainless Steel (Cast) Ferritic/martensitic	Non-hardened	*T41	130
			PH-hardened	*T41	90
			Hardened	*T41	100
		Stainless Steel (Cast) Austenitic	Austenitic	*T41	130
			PH-gehärtet	*T41	90
		Stainless Steel (Cast) Austenitic-ferritic (Duplex)	Non-weldable ≥ 0,05 % C	*T41	110
			Weldable < 0,05 % C	*T41	90

Tools for highest expectations
SIMTEK

Cutting Speed Recommendation

ISO-Group	Recommended Cutting Grade	Work piece material	Sub-group	Alternative cutting grade	Vc m/min (Start)
K	X800 X802 X804 X808	Malleable	Ferritic (short chipping)	*T57	180
			Pearlitic (long chipping)	*T57	150
		Grey Cast Iron	Low tensile strength	*T57	200
			High tensile strength	*T57	150
		Spheroidal Graphite cast iron	Ferritic	*T57	120
			Pearlitic	*T57	110
			Martensitic	*T57	110
N	X400 / X600 X402 / X602 X404 / X604 X408 / X608	Aluminium alloys, Whrought	Can not be hardened	*F25	590
			Can be hardened, hardened	*F25	530
		Aluminium alloys, Cast	Can not be hardened	*F25	590
			Can be hardened, hardened	*F25	530
		Aluminium alloys, Cast	< 5 % Si	*F25	240
			5 - 12 % Si	*X17	240
			> 12 % Si	PKD[1]	180
		Copper- and Copper Alloys	Free Cutting Alloys, ≥1 % Pb	*F25	290
			Brass, leaded bronzes, ≤ 1 % Pb	*F25	290
			Bronze, lead-free copper incl. electrolytic copper	*F25	210

Tools for highest expectations
SIMTEK

Cutting Speed Recommendation

ISO-Group	Recommended Cutting Grade	Work piece material	Sub-group	Alternative cutting grade	Vc m/min (Start)
S	X400 / X600 X402 / X602 X404 / X604 X408 / X608	Heat-resistant super alloys Fe-based	Annealed or solution treated	*X79	40
			Aged or solution treated and aged	*X79	30
		Heat-resistant super alloys Ni-based	Annealed or solution treated	*X79	40
			Aged or solution treated and aged	*X79	20
			Cast or Cast and aged	*X79	30
		Heat-resistant super alloys Co-based	Annealed or solution treated	*X79	10
			Solution treated and aged	*X79	10
			Cast or Cast and aged	*X79	10
		Titanium Alloys	Commercial pure (99,5 % Ti)	*X79	80
			α, near α and α + β alloys, annealed	*X79	40
			α+β Alloys in aged conditions as well as β alloys. Annealed or aged.	*X79	40
H	CBN[1]	Hardened steel		*T91	50
		Chilled cast iron, cast or cast and aged		*T91	90

1) For best results, a special cutting edge geometry is recommended here.
Please contact our tecnical support +1 862 757 8130 oder usa@simtek.com.

(2) Recommendation depends on the chosen cutting inserts. Please look at the cutting grade recommendations on the catalog page of the cutting insert.

Tools for highest expectations
SIMTEK

General Instructions For Use

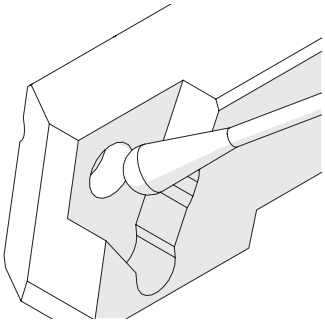

Please clean insert seat well before mounting and use.

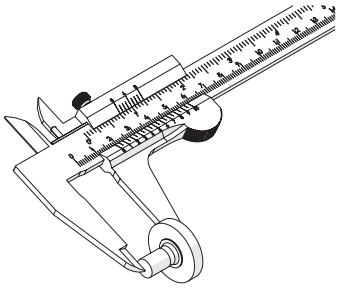

Please control your work pieces frequently.

We recommend the use of tool presetting and measuring devices.

Tools for highest expectations
SIMTEK